THIS DRAWING IS UNPUBLISHED. RELEASED FOR PUBLICATION 20
© COPYRIGHT 20 BY - ALL RIGHTS RESERVED.

REVISIONS

P	LTR	DESCRIPTION	DATE	DWN	APVD
	A	INITIAL RELEASED	11APR2016	L.Z	X.X
	B	EC-16-011351 NEW REVISE	01JUL2016	L.Z	X.X
	B1	REVISED PER ECR-16-012993	19SEP2016	L.Z	X.X

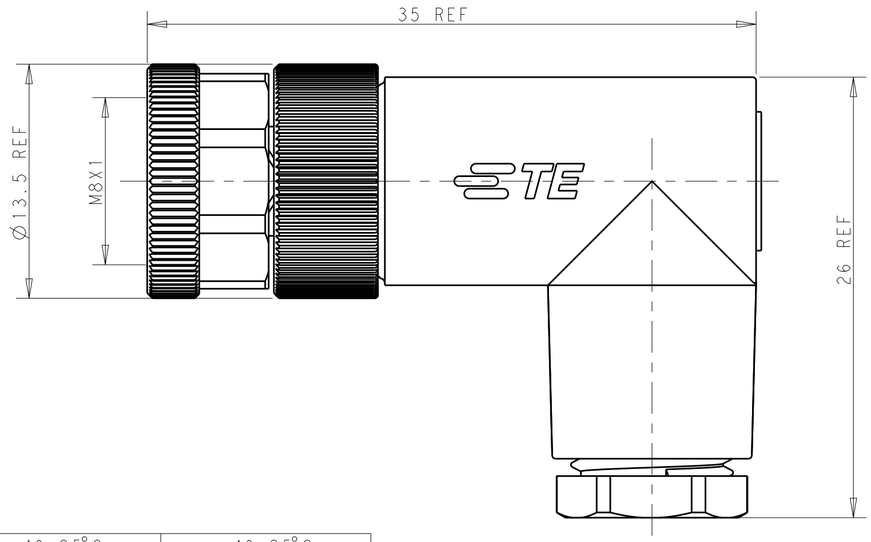

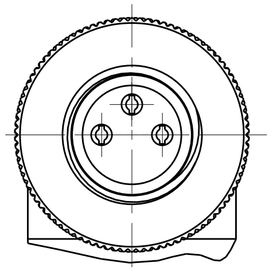

3POS

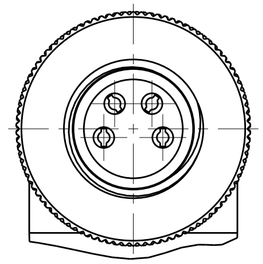

4POS

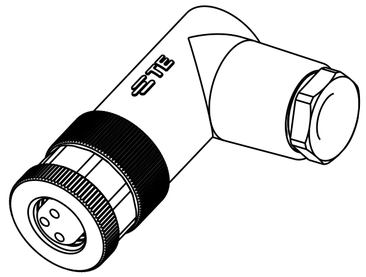

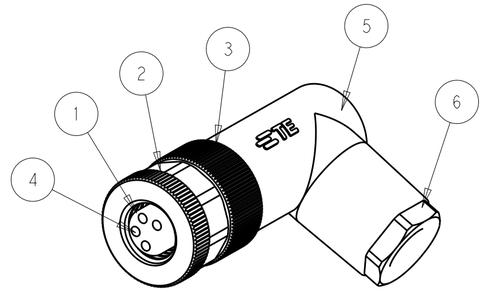

OPERATION TEMPERATURE	-40~85°C	-40~85°C
DEGREE OF PROTECTION	IP67	IP67
INSULATION RESISTANCE	>100MΩ	>100MΩ
RATED IMPULSE VOLTAGE	800V	1500V
MATERICAL GROUP	II	II
OVERVOLTAGE CATEGOYR	II	II
POLLUTION DEGREE	3	3
RATED CURRENT	3A	3A
RATED VOLTAGE	30V	60V
TECHNICAL DATA	T401200804X-000	T401200803X-000

NOTES;

1.PARTS MATERIAL DATA:SEE TABLE

2.CONTACT FINISH:
GOLD OVER NICKEL OR SILVER OVER NICKEL

3.CABLE WIRES:
26AWG/0.14mm^2 Max & 24AWG/0.25mm^2 Max

4.ALL DIMENSIONS ARE FOR NOMINAL REFERENCE ONLY UNLESS OTHERWISE STATE

5.PACKAGIN: 1 PIECE IN A BAG

6.PN INFORMATION FOR ASSEMBLY PARTS
T401200XXXX-000
- CONTACT FINISH:
  1:GOLD OVER NICKEL
  2:SILVER OVER NICKEL
- NUMBERS OFPINS:
  03:3 PINS
  04:4 PINS
  ...
- CABLE OUTLET:
  8:PLASTIC/8(CABLE FEED:3.5~4.8mm)
  9:METAL(CABLE FEED:3.5~5.0mm)
  ...

注意事项;

1.零件材料参见附表

2.表面处理:镀金或镀银

3.适用线材:26AWG/0.14mm2 Max &
24AWG/0.25mm2 Max

4.所有尺寸标注为基本参考,除非其它说明

5.包装:每BAG装1PC

6.料号数字代码参考上表

TE PN	TYPE				OBSOLETE		OBSOLETE	
~~T4012008042-000~~	~~RPC-M8-FR-4CON-PG7-M~~				OBSOLETE			
T4012008041-000	RPC-M8-FR-4CON-PG7-MU							
~~T4012008032-000~~	~~RPC-M8-FR-3CON-PG7-M~~				OBSOLETE			
T4012008031-000	RPC-M8-FR-3CON-PG7-MU							
COMMENT	MATERIAL	DESCRIPTION	ITEM	T401200804X-000	T401200803X-000	T401200804X-000	T401200803X-000
-	PBT	PRESS SCREW	6	1	1	1	1
-	PBT	RIGHT ANGLE PLASTIC HOUSING	5	1	1	1	1
SILVER 80U"	BRASS	M8 SCTREW ASSY REC TERMINAL	4	4	-	3	-
GOLD 3U"				-	4	-	3
NICKEL 80U"	BRASS	M8 SCREW ASSY OUT SCREW	3	1	1	1	1
NICKEL 80U"	BRASS	M8,FEMALE INSERT NUT	2	1	1	1	1
BLACK	PA	M8,FEMALE HSG,A CODE,4PIN	1	1	1	-	-
		M8,FEMALE HSG,A CODE,3PIN		1	-	1	1

THIS DRAWING IS A CONTROLLED DOCUMENT.	DWN LEAR ZHANG 11APR2016	TE Connectivity	
DIMENSIONS: mm	CHK KOBBY ZHAO 11APR2016	NAME M8 FEMALE SCREW ASSY RIGHT ANGLE UNSHIELDING CONNECTOR -	
TOLERANCES UNLESS OTHERWISE SPECIFIED: 0 PLC ±- 1 PLC ±0.20 2 PLC ±0.20 3 PLC ±0.20 4 PLC ±- ANGLES ±-	APVD XU XIANG 11APR2016		
	PRODUCT SPEC 108-106140		
	APPLICATION SPEC 114-137144-1		
MATERIAL - -	WEIGHT -	SIZE A2 / CAGE CODE - / DRAWING NO ©-T40120080XX000	RESTRICTED TO -
FINISH - -	CUSTOMER DRAWING	SCALE 2:1 / SHEET 1 OF 1	REV B1